Sheet 9C

TYPE 9C AMPLIFIER MODULATOR

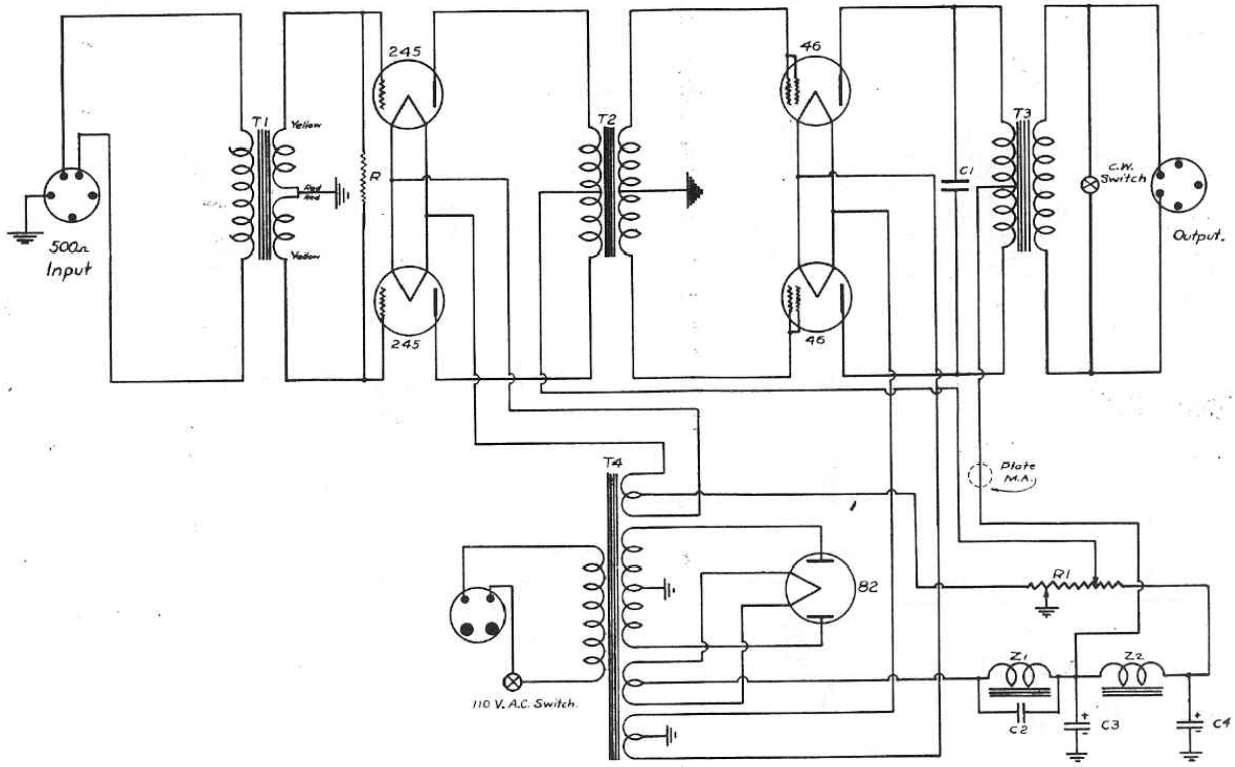

LIST OF PARTS FOR 9C CLASS B AMPLIFIER-MODULATOR

Quantity Required	Symbol	Size	Rating	Description	Type No.	Price Each
1	R	250,000 ohm	1 watt	Metallized Resistor	MR2	$ .10
1	R_1	12,000 ohm	55 watt	Ohmite Adjustable Vitreous Resistor with two sliders	0582	.99
1	C_1	.004 mfd.	2500 V.	Mica Condenser	1456	.50
1	C_2	.25 mfd.	400 V.	Condenser	481	.20
2	C_3 C_4	16 mfd.	500 V.	Aerovox Dry Electrolytic Condensers	G5-16	1.35
1	T_1	500 pri. to 2 grids		Input Transformer	610	4.00
1	T_2	45's to Class B grids		Interstage Transformer	715	4.00
1	T_3	46's to 5000 ohms		Class B Output	761	5.00
1	T_4			Power Transformer 500-500 V. C.T.; 2.5 V.; 2.5 V.; 2.5 V. 150 MA 4 A. 4 A. 4 A.	904	5.85
1	Z_1	10-20 hy.	150 MA.	Input Choke	807	4.00
1	Z_2	25 hy.	100 MA.	Filter Choke	804	2.50
4	UY G.E. Textolite Wafer Sockets					.06
4	UX G.E. Textolite Wafer Sockets					.06
2	A.C. Snap Switches					.35
1	9C Chassis, completely punched					2.75

Reserved AA9TT Document